Characteristics	1.1	Manufacturer			**Clark**
	1.2	Manufacturer's model designation			**C PS 12 ac**
	1.3	Drive : E (electric)			E
	1.4	Type of control : T (tiller) S (steering wheel) A (pedestrian) P (standing) R (seated)			T / A
	1.5	Load capacity		**Q (t)**	1.2
	1.6	Load centre distance		**c (mm)**	600
	1.8	Load distance, centre of drive axle to fork		**X (mm)**	700
	1.9	Wheelbase		**Y (mm)**	1.350
Weights	2.1	Service weight (battery included)		**Kg**	770
	2.2	Axle loading (with load)	front / rear	**Kg**	630 / 1.340
	2.3	Axle loading (without load)	front / rear	**Kg**	528 / 242
Wheels - Chassis	3.1	Tyres : plt (polyurethane) vlk (vulkollan)			plt
	3.2	Front wheels size		**mm**	245
	3.3	Rear wheels size		**mm**	85
	3.4	Stabilizers wheels dimensions		**mm**	150
	3.5	Wheels : number front / rear (x = traction)			1x + 1 / 2
	3.6	Front track width		**b 10**	520
	3.7	Rear track width		**b 11**	380
Dimensions	4.2	Lowered mast height		**h1 (mm)**	1.995
	4.3	Free lift		**h5 (mm)**	85
	4.4	Lifting height		**h3 (mm)**	2.815
	4.5	Extended mast height		**h4 (mm)**	3.400
	4.9	Height of tiller arm in drive position (min / max)		**h14 (mm)**	840 / 1.295
	4.15	Forks lowered height		**h13 (mm)**	85
	4.19	Total length		**l1 (mm)**	1.905
	4.20	Length to forks face		**l2 (mm)**	754
	4.21	Overall width		**b1 / b2 (mm)**	800
	4.22	Forks dimensions		**s / e / l**	70 / 180 / 1.150
	4.24	Fork carriage width		**b3 (mm)**	630
	4.25	Width over forks		**b5 (mm)**	560
	4.32	Ground clearance	laden	**m2 (mm)**	15
	4.33	Aisle width for pallets 1000 x 1200 forking side 1200		**Ast3 (mm)**	
	4.34	Aisle width for pallets 800 x 1200 forking side 800		**Ast3 (mm)**	2.227
	4.35	Turning radius		**Wa (mm)**	1.545
Performances	5.1	Travel speed	laden / unladen	**Km / h**	4.5 / 5.2
	5.2	Lifting speed	laden / unladen	**m / s**	0.11 / 0.20
	5.3	Lowering speed	laden / unladen	**m / s**	0.31 / 0.18
	5.7	Gradient performance (S2 30 min)		**%**	
	5.8	Max gradient performance (S2 5 min)		**%**	7 / 10
	5.10	Service brake M (mechanical) I (hydraulic) IV (inversion braking)			M-IV
El.Motor	6.1	Traction motor, rating S2 60 min		**KW**	0.7
	6.2	Lifting motor, rating S3 15%		**KW**	2
	6.3	Battery according DIN 43531 / 35 / 36 A, B, C, no			no
	6.4	Battery voltage, nominal capacity K5		**V / Ah**	24 / 160
	6.5	Battery weight (± 5 %)		**Kg**	144
Others	8.1	Type of travel control			AC
	8.4	Sound level at driver's ear		**dB (A)**	< 70

Technical specification according to VDI 2198

All values shown are for standard lift truck with standard equipment. If the truck is supplied with options, values may change. All values given may vary +5% and –10% due the motor and system tolerances and represent nominal values obtained under typical operating conditions.

double load wheels	o
push button for vertical operation	o
automatic battery refilling	o
lifting/lowering by push buttons on tiller arm	s
electronic braking system	s
electronic speed control	s
electromagnetic parking brake	s
BDI/hour meter with lifting cut-off at 80% discharge	s
built-in charger	s

s=standard	o=option

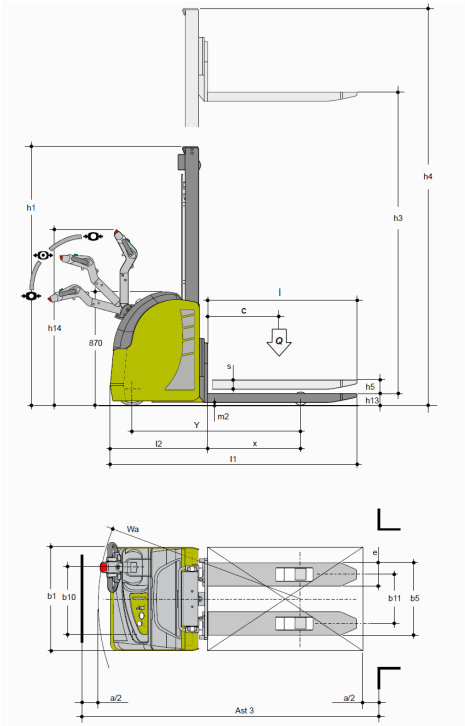

h3		h1	h4	h5	(Q) t
1.565 sx	mm	2.085	2.085	1.565	1.2
2.815 dx	mm	2.005	3.400	85	1.0
3.515 dx	mm	2.355	4.100	85	0.8
4.115 dx	mm	2.655	4.700	85	0.4